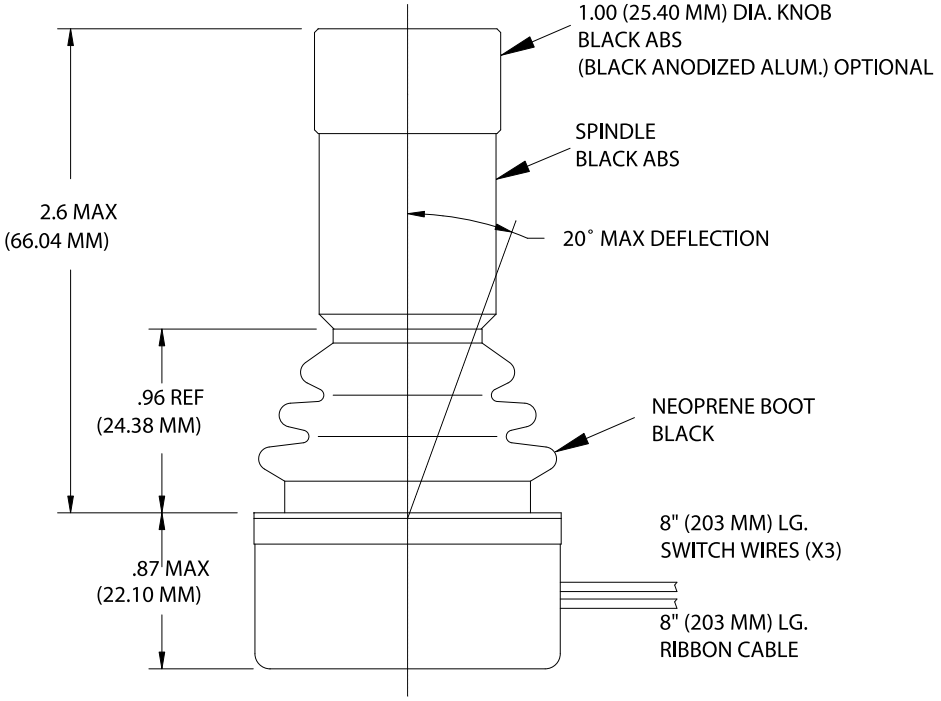

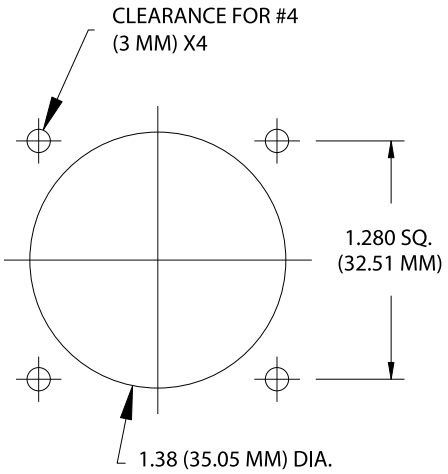

MOUNTING DETAIL

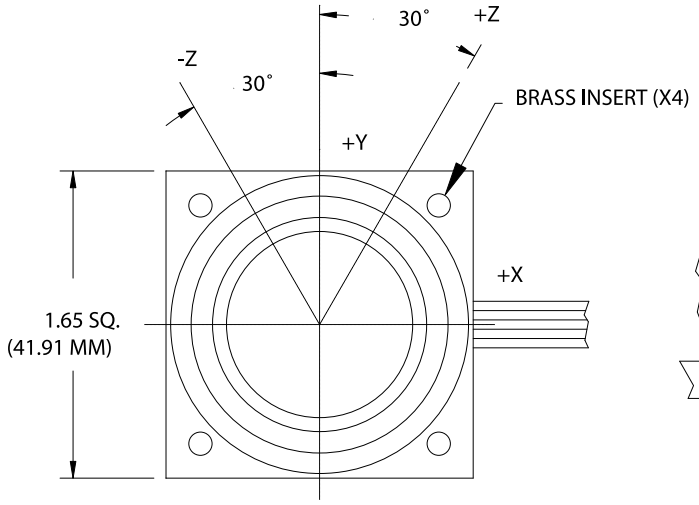

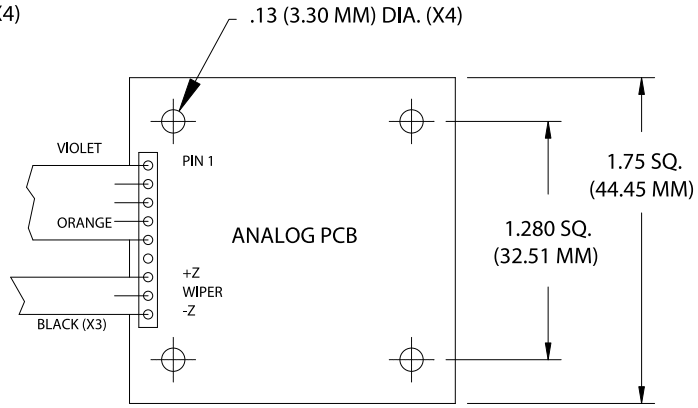

ORDERING INFORMATION:

F □ 8 □ □ [ ] [ ] - N A

1 4-40 THREADED INSERTS
2 WITHOUT THREADED INSERTS, ROUND BODY (SPECIAL ORDER ONLY)
3 3 MM THREADED INSERTS

Z CONFORMAL COATING
DZ LOW TEMP AND CONFORMAL COATING
R CONDUCTIVE BOOT
RF CONDUCTIVE BOOT AND FERRITE BEAD

OPTIONAL ALUMINUM KNOB

0 WITHOUT NEUTRAL SWITCH
1 NEUTRAL SWITCH (AVAILABLE ON +5V MODELS ONLY)

2 +/-5V IN, +/-5V OUT
4 +5V IN, 0.5V TO 4.5V OUT
5 +5V IN, 0 TO 5V OUT

REF DWG. A761718 FOR ELECTRICAL DETAILS

CTI ELECTRONICS CORPORATION
110 Old South Ave , Stratford , CT 06615 - Tel 203 / 386-9779 - Fax 203 / 378-4986 - www.ctielectronics.com

TITLE:

MODEL F1800 3 AXES SERIES

REV. G	DATE: 1-5-10	A 761701
APPROVED:	DRAWN: S.SZERSZEN	